WELLER 8017U GAS VALVE UNIT FOR PYROPEN | T0051619899

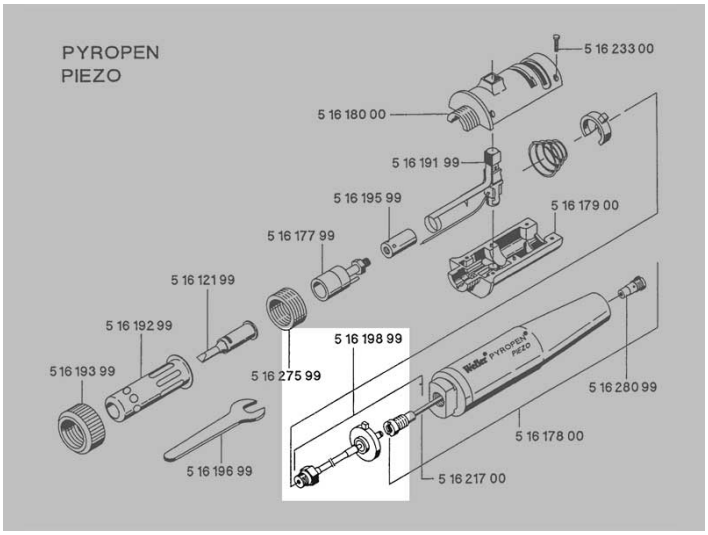

SKU: T0051619899

WELLER 80 17U REPLACEMENT PART

80 17U - **Gas valve unit for Pyropen Piezo soldering iron**.
Weller product no.: **T0051619899**.