RTP002CXMS WELLER SOLDERING TIP CONICAL BENT 30° (Ø0.2MM) | T0050101899

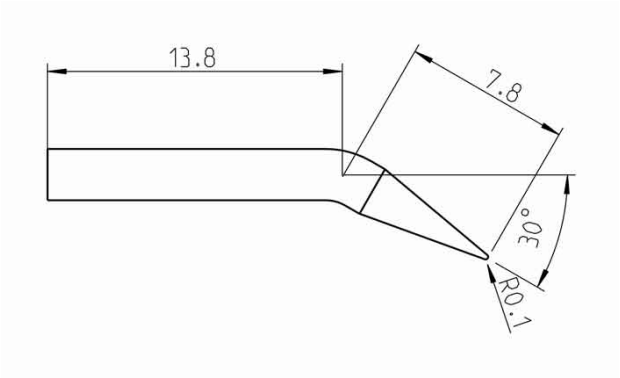

SKU: T0050101899

ORIGINAL WELLER RTP 002 C X MS TIP

RTP 002 C X MS - **Conical bent shaped soldering tip Ø 0.2 mm**, MIL-SPEC compliant.
RT PICO series high performance active tip, suitable for the smallest components **from XS to S** (0402 to 01005).
Short tip-to-grip distance for maximum precision.
Weller product no.: **T0050101899**.

Specifications

- For WXPP MS soldering iron
- Performance: 40 W
- Heating time (50-350°C): **3 sec.**
- Tip shape: Conical bent - **Angle: 30°**
- Tip diameter: Ø 0.2 mm
- Body diameter: 2.4 mm
- Length: **20.6 mm**
- Compliances: **IPC**, **MIL-SPEC** (MIL version)

- Radiator technology: Active Tip
- UPC: 037103331441.